HUMMINBIRD

LCR 3000

OPERATIONS MANUAL

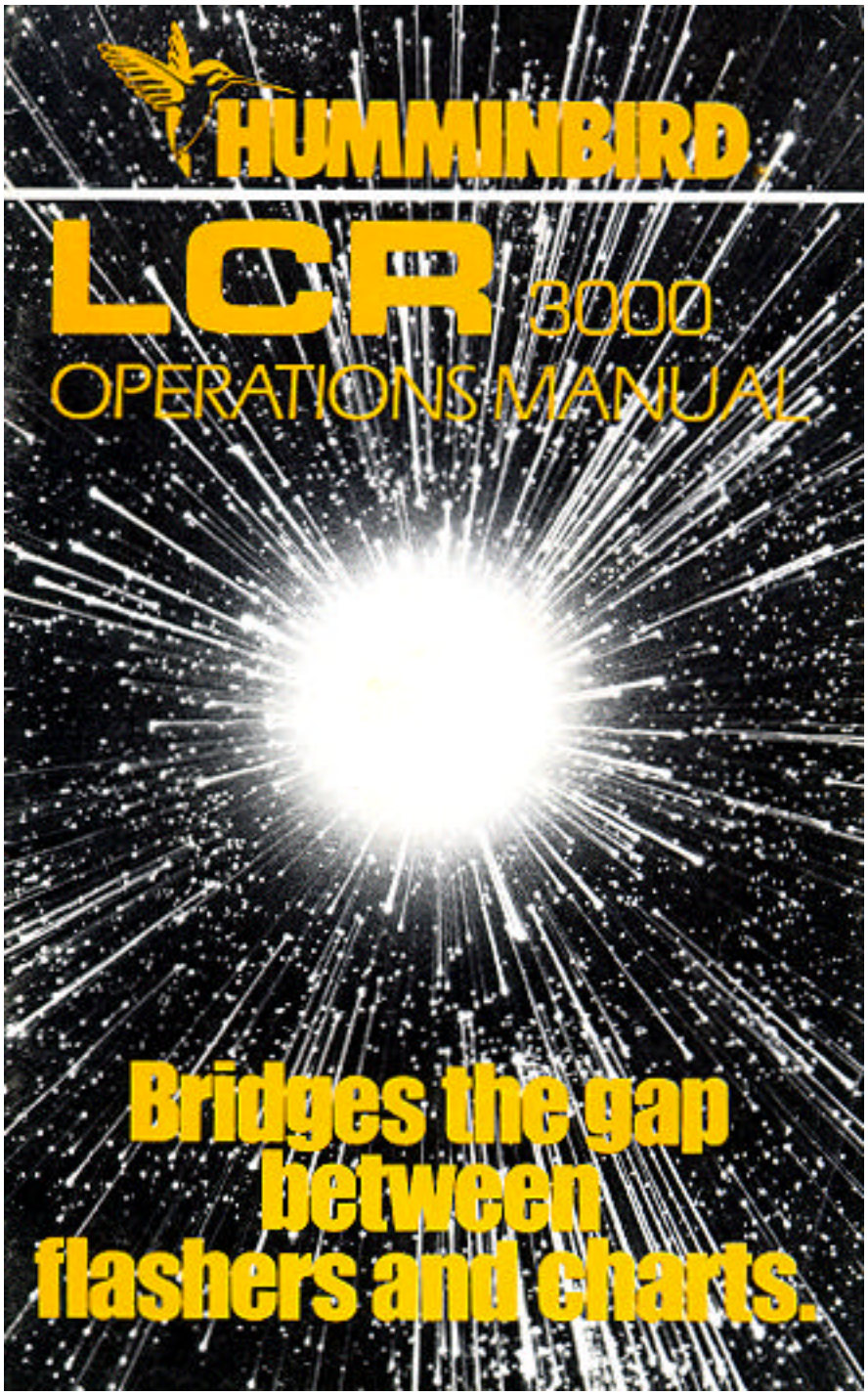

Bridges the gap between flashers and charts.

Before attempting to install or operate your Humminbird LCR, it is recommended that you read the operations manual thoroughly. The LCR is totally new concept in sonar and has a number of special features not found on any other recorder. To completely understand all the features of the LCR, we suggest you follow the instructions set forth in this manual. If, after reading the instructions, there is something you do not completely understand about the operations of your unit, we recommend you contact our Customer Service Department- CALL 334-687-0503.

IMPORTANT:

Complete your warranty card and return it to us immediately.

INTRODUCTION

Congratulations on selecting the most advanced piece of sonar equipment ever designed. Your new Humminbird LCR (Liquid Crystal Recorder) incorporates the most advanced, innovative Concepts in sonar equipment. The LCR is probably the most intelligent depth sounder ever created. Advanced microcomputer technology is used to simplify its operation, not complicate it , so you can quickly learn the basics of operating your unit. After a couple of trips on the water, you will be operating your unit like an expert.

Your Humminbird LCR has a number of outstanding features including a unique automatic feature. This Computer controlled feature makes using your LCR as simple as pushing the “On” button. The computer will automatically adjust the sensitivity, change the depth scale even if the bottom goes off the screen and black out everything below the bottom to make the display easy to read.

Other features include a High Visibility LCD readout, night light, low profile swivel movement, waterproof enclosure, four depth ranges beginning with a super-shallow 15 foot depth range, and more.

Read this operations manual thoroughly for all the outstanding features of your LCR. You will be amazed at its capabilities.

Since there are virtually no moving parts, your LCR will function more trouble free than any sonar unit you have ever owned.

This unit has been engineered, tested, manufactured and is guaranteed by the employee/owners of Humminbird, a division of Techsonic Industries, located on the shores of Lake Eufaula, Alabama.

Fishing, boating and depth sounders are our business, and at Humminbird we stand behind our products 100%.

Your new LCR is covered by our Lifetime Guaranteed Service policy. We wish you good luck, good fishing and many hours of pleasure with your new Humminbird LCR.

THEORY OF OPERATION

Your Humminbird LCR works on the basic principal of sonar.

An electric signal is generated within the control head of the unit. When coupled to the to, this signal is converted to an ultrasonic signal and is transmitted toward the bottom. The speed of the ultrasonic signal traveling through the water is approximately 4800 feet per second.

The signal travels through the water until it strikes an object or the bottom. At this instant it is reflected back , picked up by the transducer, reconverted to an electronic signal and is recorded on the display of the LCR.

The reading at the far right hand position of the display illustrates that which is being passed over at that time. If you are familiar with a flasher unit, you might think of the information coming on the right side of the screen as the information that would be seen at one instant on a flasher. However, unlike a flasher, this information is not lost but is shifted or moved to the left as new information comes on. Therefore, the information is retained until it disappears from the left hand position of the display.

The display used on the LCR is a Liquid Crystal Display. The material in the display is a liquid that can be aligned such that it either “blocks” light or it lets light pass through. This “blocking” of light is what makes the black dots on the screen.

Since the LCR’s display depends on light passing through it to make the images, increasing the light source will make it easier to use. This is why your LCR can be seen so well in direct sunlight. You will also notice that the display can be seen better at certain angles. The LCR mounting has been designed for tilting and pivoting so that you can easily maintain a good angle for viewing. Another characteristic of an LCD display is that you may find that some polarized glasses might affect the view by causing a rainbow prism to appear. This condition can possibly be improved by a slight adjustment in tilt.

The high visibility readout of the LCR allows you to see fish, bottom contour and underwater structure.

The LCR is designed to operate with a standard 16-degree transducer included with the unit. Other transducers, such as 32 degrees, cannot be used. In order for your LCR to operate well at high speeds, you must have a properly mounted transducer. Please read the transducer mounting procedure carefully.

TRANSDUCER MOUNTING PROCEDURE

Humminbird’s high-speed transducer is supplied with your LCR. This transducer has been designed to give good high speed readings on most all boat designs, including aluminum.

<u>Please carefully consider the following before installing your transducer.</u>

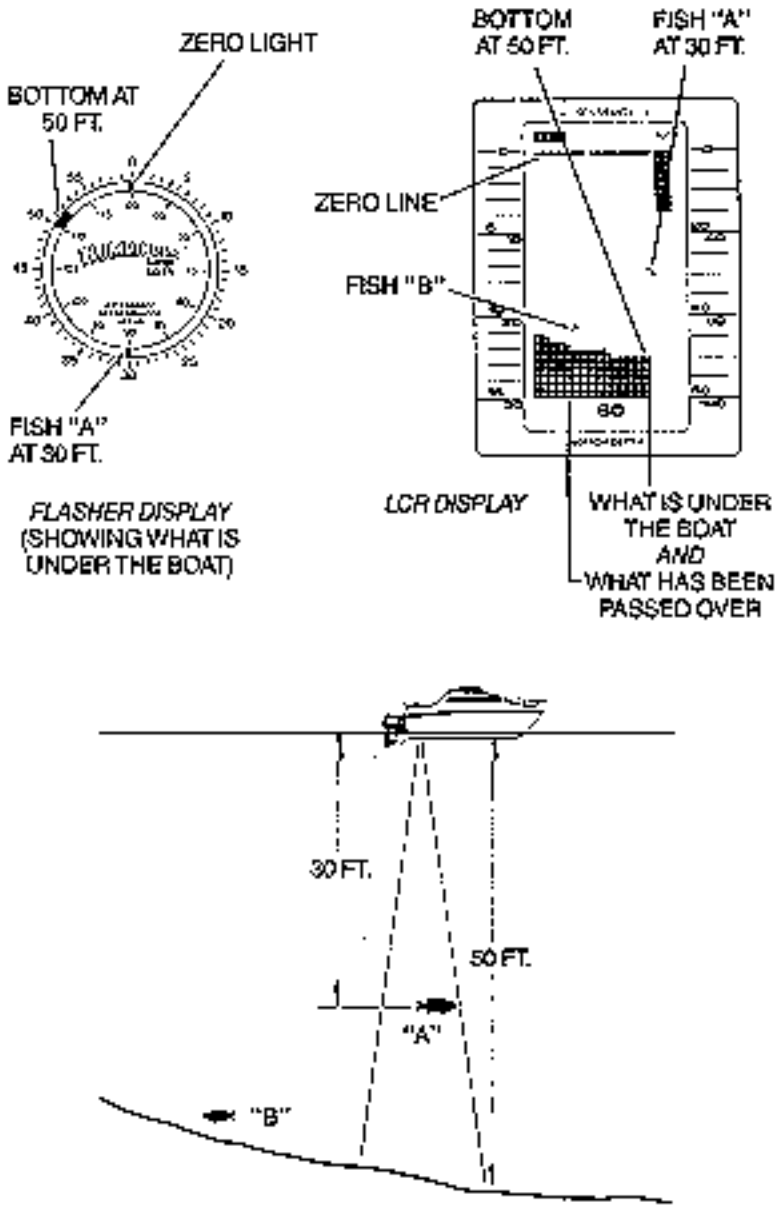

FIGURE 1

TRANSDUCER MOUNTING OPTIONS

A. Transom Mount- The Humminbird high speed transducer allows the transducer element to be mounted below the bottom of the boat hull keeping the transducer out of turbulent water and insuring good high speed operation. The transducer will absorb the blow of any obstruction by rotating up out of the metal spring bracket without harming the transducer, or your boat. The transducer can be re-engaged by simply rotating the transducer down and snapping it back in place. (See Figure A)

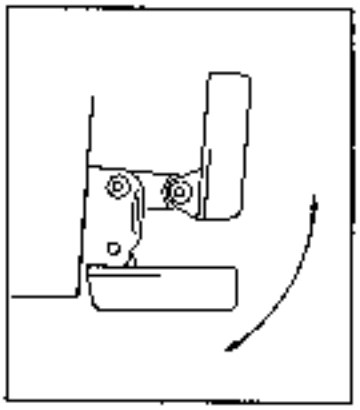

Figure A

B. Inside Hull Mount- The high speed transducer can be mounted inside the hull (without pivot assembly) using the proper two-part epoxy, such as Humminbird's epoxy kit. Even though there is some loss of signal in shooting through the hull, your LCR will perform well with this type of installation. You cannot shoot through the hull of an aluminum boat.
C. Trolling motor Mount- This type of transducer is not supplied with your LCR. It is designed to mount on the foot of a trolling motor. You may exchange your un-used high speed transducer for a trolling motor transducer. Call the Humminbird Customer Service Department.
D. Bronz Thru-Hull Mount- This transducer is not supplied with your LCR but for an additional cost you may exchange your un-used high speed transducer for a bronz thru-hull. The bronz thru-hull transducer has a threaded stem which installs through a hole drilled in the boat hull, leaving the housing exposed under the boat. This type of installation must be used for many boats with in-board engines, because there is no suitable location on the transom away from the noise and turbulence created by the prop. A bronz thru-hull transducer should be installed by qualified personnel only.

The LCR will operate well at high speeds with a properly mounted transducer. Remember, a transducer will not work transmitting through air or through air bubbles.

1. TRANSOM MOUNTING PROCEDURE

Step 1.
MOUNTING LOCATION- It is important that the transducer be mounted on the transom where water flow is in constant contact with the transducer. You may wish to observe the rear of the boat while it is moving through the water to determine the best mounting location.

Step 2.
BRACKET INSTALLATION (Aluminum Boats)- To install the metal bracket on an aluminum boat locate the template on the transom between rows of rivets, or ribs that are on the bottom of the boat. Align the template so that the bottom corner of the template nearest the center of the transom is on the bottom edge of the transom.

Figure B

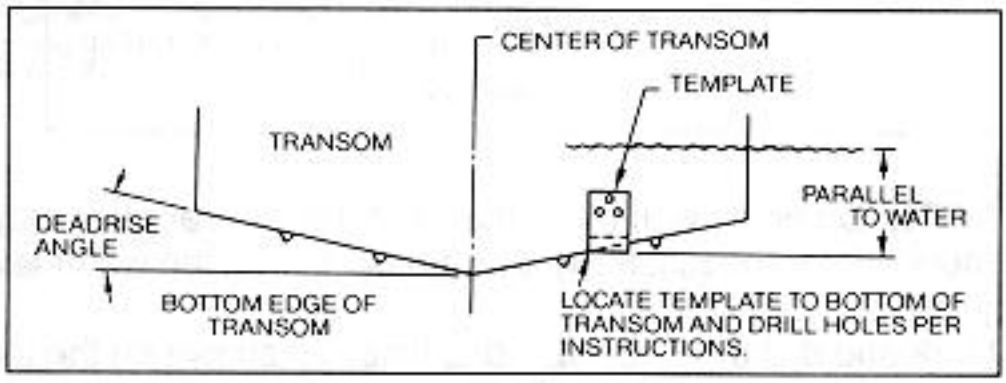

Once the location is determined mark and drill three 7/64” dia.. holes noted on the template. Attach the metal bracket using three #10 self threading screws supplied. Be sure to align holes in the center of the Bracket slots. On some aluminum boats it may be necessary to use a wood back-up plate. It is important to use a silicone sealant between the screwhead and bracket in order to prevent leaking. (See Figure C)

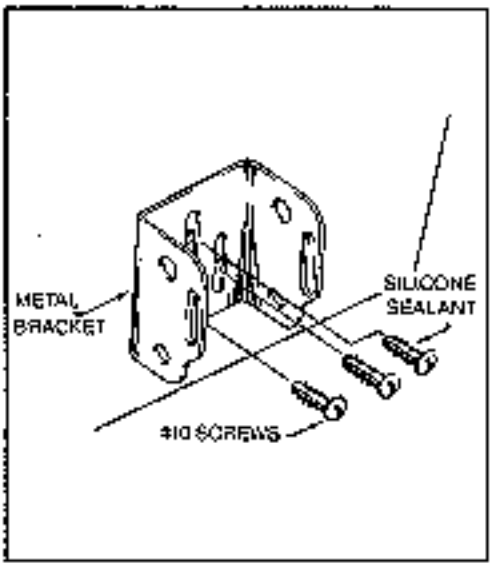

Figure C

Step 2.
BRACKET INSTALLATION (Fiberglass Boats)- If your boat has a stepped transom located below and under the main transom, the compact transducer design allows mounting in this area. This mounting location is recommended for good reading at very high speeds. (See Figure D)

To install the metal bracket on a fiberglass boat, locate the template on the transom in the same manner as for an aluminum boat. (See Figure C)

Figure D

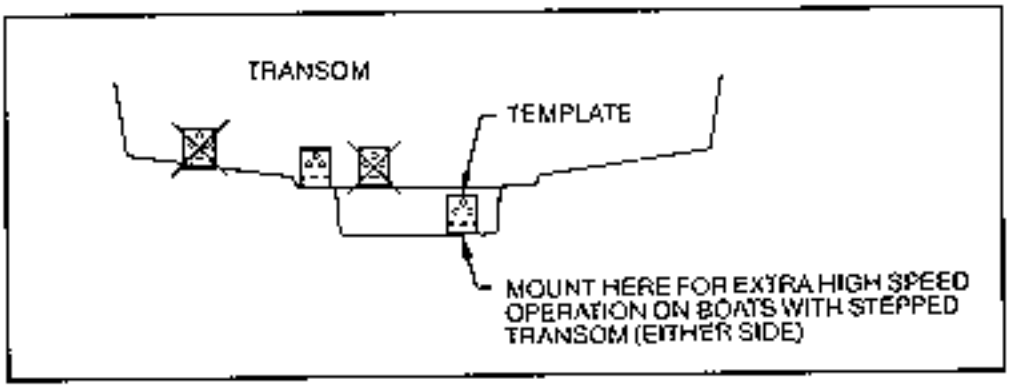

NOTE: On boats with more than 15 degree deadrise angle it may be necessary to mount the transducer slightly off parallel with the water level. (See Figure E)

Mark and drill the three 9/64” dia. holes as shown on the template. Attach the metal bracket using the three #10 self threading screws supplied. Be sure to align the holes so that they are centered vertically in the three slots found in the bracket. It is important to use a silicone sealant between the screwhead and bracket in order to prevent leaking.

Figure E

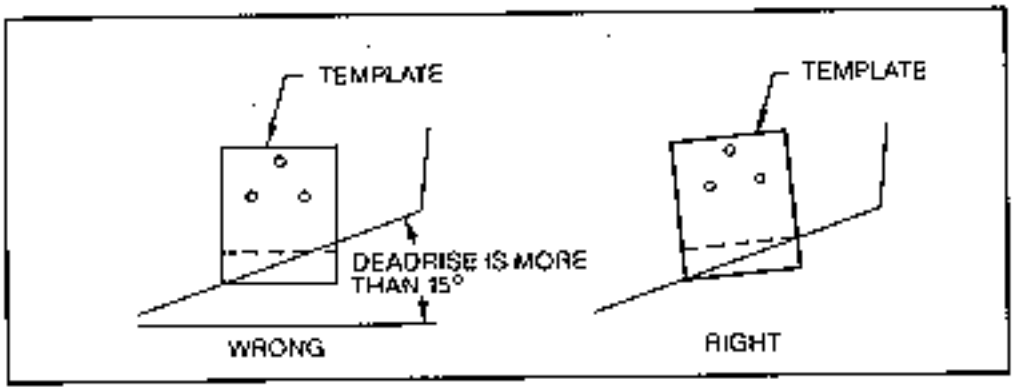

Step 3.
TRANSDUCER PIVOT ASSEMBLY- Assemble the pivot to the transducer main body using the two ¼”x5/8” allen head screws, two 3/8” tooth washers and two, ¼” square nuts. Make sure the tooth washers are sandwiched between the transducer main body and the pivot. The square nuts are trapped inside the pivot and will not rotate as the allen head screws are tightened. HOWEVER, DO NOT TIGHTEN AT THIS POINT. (See Figure F)

CAUTION: DO NOT APPLY LOCTITE® OR SIMILAR LOCKING COMPOUNDS BECAUSE THEY WILL ATTACK THE PLASTIC.

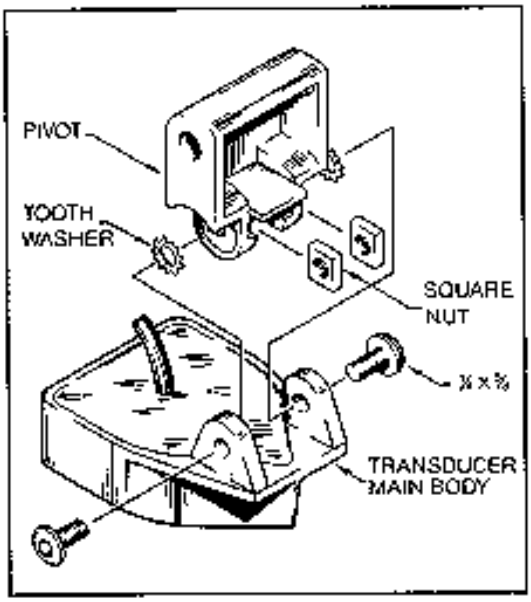

Figure F

Step 4
TRANSDUCER ASSEMBLY- Insert the transducer assembly into the metal bracket from the bottom. Push up until the holes in the plastic pivot align with the uppermost holes in the bracket. Slide the O-ring on to the headed pin and insert it through the two parts. Assemble by screwing the ¼"x3/8" allen head screw into the end of the pin and tighten. (See Figure G)

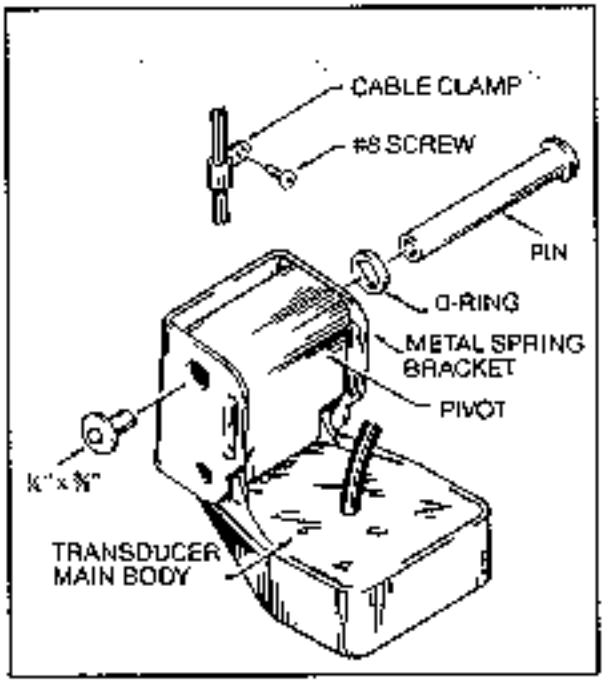

Figure G

Step 5
ANGLE ALLIGHMENT- Set the transducer angle so that it is parallel with the bottom of the boat hull. Once proper alignment is achieved, tighten the two allen head screws using the 5/32" allen wrench

provided. The screws are visible through the access holes on each side of the metal bracket. Check to make sure the transducer main body is rigidly fastened to the pivot. (See Figure H)

Figure H

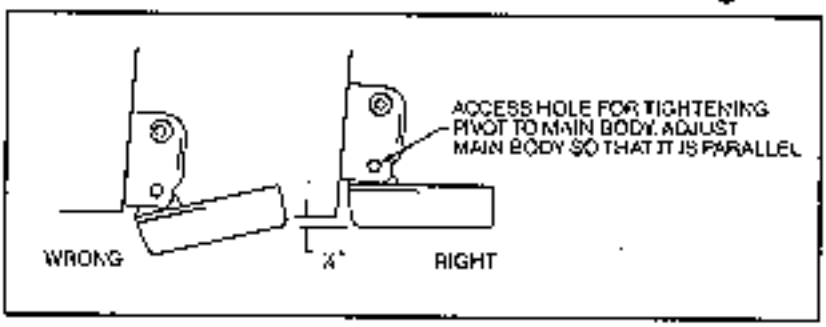

Step 6
CHECK POSITION OF TRANSDUCER- At this point, check to see that the bottom of the transducer is a minimum of ¼" below the bottom of the transom. (However, as noted in STEP 2, the top of the transducer can not fall below the bottom of the transom). If it is not, remove the transducer assembly from the metal bracket by removing the pin installed during STEP 3. Loosen the metal bracket mounting screws, re-position the bracket utilizing it's slotted holes, tighten and re-assemble. It may be necessary to replace the silicone sealant after this adjustment is made.

NOTE: It may be necessary to make several high speed runs to adjust transducer either UP/DOWN or to re-adjust the angle to achieve optimum results.

Step 7
CABLE CLAMPS- Install cable clamps as necessary by drilling a 1/8" dia. hole for the # 8 screw supplied.

2. INSIDE HULL MOUNTING PROCEDURE
Warning: In order to achieve proper results with this type installation, it is important that the transducer be mounted by someone familiar with the use of two part epoxy adhesives. For this reason, Techsonic Industries, Inc. will not be responsible for any damage due to the mounting of your transducer in this manner.
NOTE: An Epoxy Kit (Part N. EPK) is available from Humminbird. This Epoxy Kit has been formulated for Inside Hull Transducer Installation.

1. Select as flat an area as possible near the aft end and center of boat where the hull is thin and not double. If the bottom has a runner down the center of boat, select an area to one side of the runner, but as close to the runner as possible.
2. Clean the inside of the boat with lacquer thinner in the area transducer is to be mounted. Outside of boat in this area should also be cleaned. (Not with lacquer thinner).
3. Put approximately one inch of water in the bottom of the boat.
4. Put transducer in the water. The bottom of the transducer should be in a flat area and should be in good contact with the bottom of the boat.
5. Operate the LCR with the boat operating at high speed. The transducer may have to be moved in order to find an area where satisfactory operation is observed.
6. When an area is found that produces satisfactory operation, mark the location of the transducer.
7. Remove the water and transducer and clean the marked area and the bottom of the transducer thoroughly.

8. Using the Humminbird Epoxy Kit or equivalent, mix an ample amount of epoxy without causing it to bubble and pour it in the area the transducer is to be mounted. The puddle should be larger than the bottom of the transducer.
9. Coat the bottom of the transducer with epoxy, then put it in the center of the puddle and push down on the transducer while moving it around in a circular motion. This forces out any air bubbles that may be trapped between the bottom of the transducer and the hull of the boat.
10. Let epoxy cure then the transducer is ready to operate. No water is now required in the bottom of the boat and gas and oil that is spilled inside of the boat will not degrade performance as it will if the transducer is placed only in water.
    CAUTION: Do not use the silicone seal or any soft adhesive to bond the transducer to the hull. This will reduce the sensitivity of the unit.

CAUTIONS

1. Occasionally the “eye“ of your transducer may become dirty from storage or from contact with oils present in boats or marina environments. (Oil will cause the “eye” to lose the intimate contact with the water which is necessary for efficient operation.) The “eye” may be cleaned with liquid detergent.
2. Improper installation of the transducer can alter the efficiency and accuracy of the entire system.
3. If your boat of transducer is out of the water for a period of time, it may take a short period of time for the transducer to become thoroughly “wetted” when returned to the water. Also, re-entry may cause turbulence which will create air bubbles in the “eye” of the transducer. The bubbles will disappear in a short time or can be removed by rubbing the transducer “eye” with your fingers while the transducer is in the water.
4. If your instrument should fail to function, be sure to check all the electrical connections before removing the transducer or calling a serviceman.
5. Inspect your transducer cable and make sure that it has not been cut or damaged to the point where it will affect the performance of the transducer. A slight nick or cut, exposing the outer cable, can be repaired by wrapping with electrical tape. A transducer can be damaged if the inner cable and outer cable are allowed to make contact. Such a problem can sometimes be corrected by properly splicing the coaxial cable. This should only be attempted by a qualified service technician.
6. If your LCR is not working properly and you suspect the problem might be in your transducer, we would recommend you borrow a unit from a friend and try it on your boat. If the symptoms are the same, you can almost be certain that the problem is in the transducer.

INSTALLING THE LCR

The LCR should be mounted on a flat, solid surface for maximum stability. The low profile swivel mount has four holes drilled in the base. It is recommended that all four holes be used.

Position the swivel base and drill four ¼” diameter holes. Note: The LCR hole pattern Is the same as for all Humminbird flasher units. Use hardware provided to mount this base to the boat.

Next place the gimbal bracket on the swivel base and attach with four small machine screws, provided. Place the LCR in the gimbal mount and make certain the rubber washers provided are placed between the unit and the gimbal bracket Important: Note which side of the gimbal faces forward. (Slots on gimbal bracket go towards rear). Also, rubber washer must be located between the unit and the gimbal bracket.

Install the mounting knobs and tighten snugly. The unit can now be swiveled and tilted to any desired position.

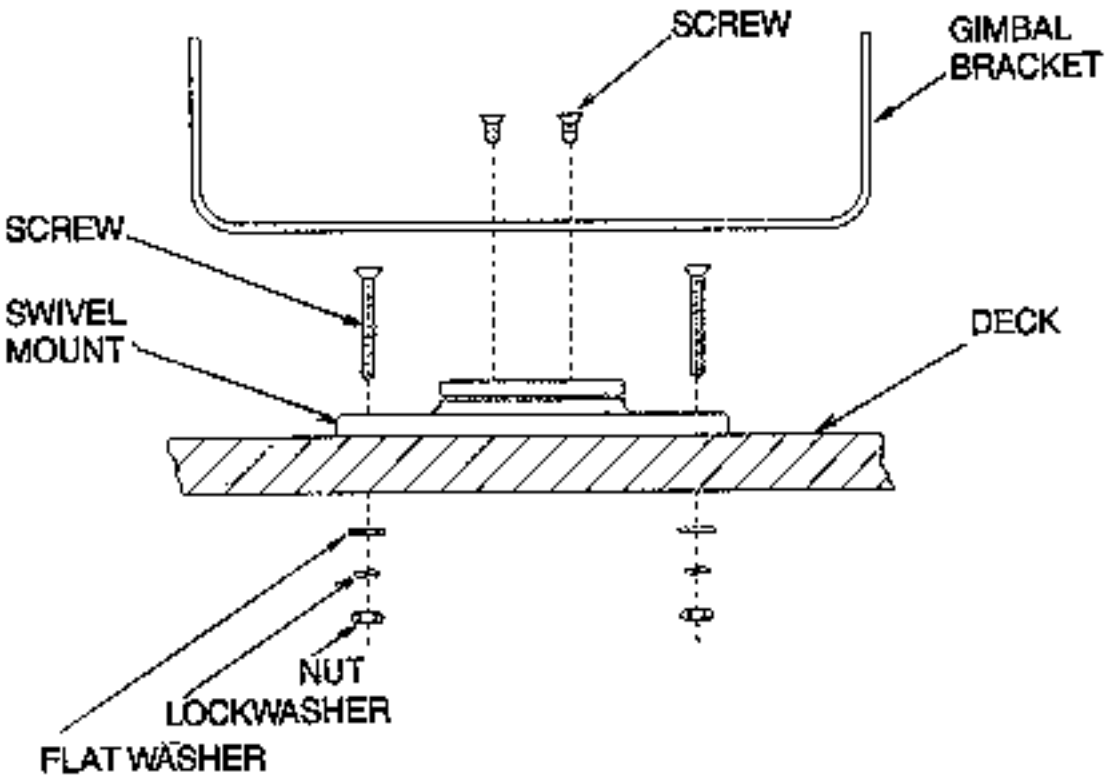
SCREW
GIMBAL
BRACKET
SCREW
SWIVEL
MOUNT
DECK
NUT
LOCKWASHER
FLAT WASHER

FIGURE 9

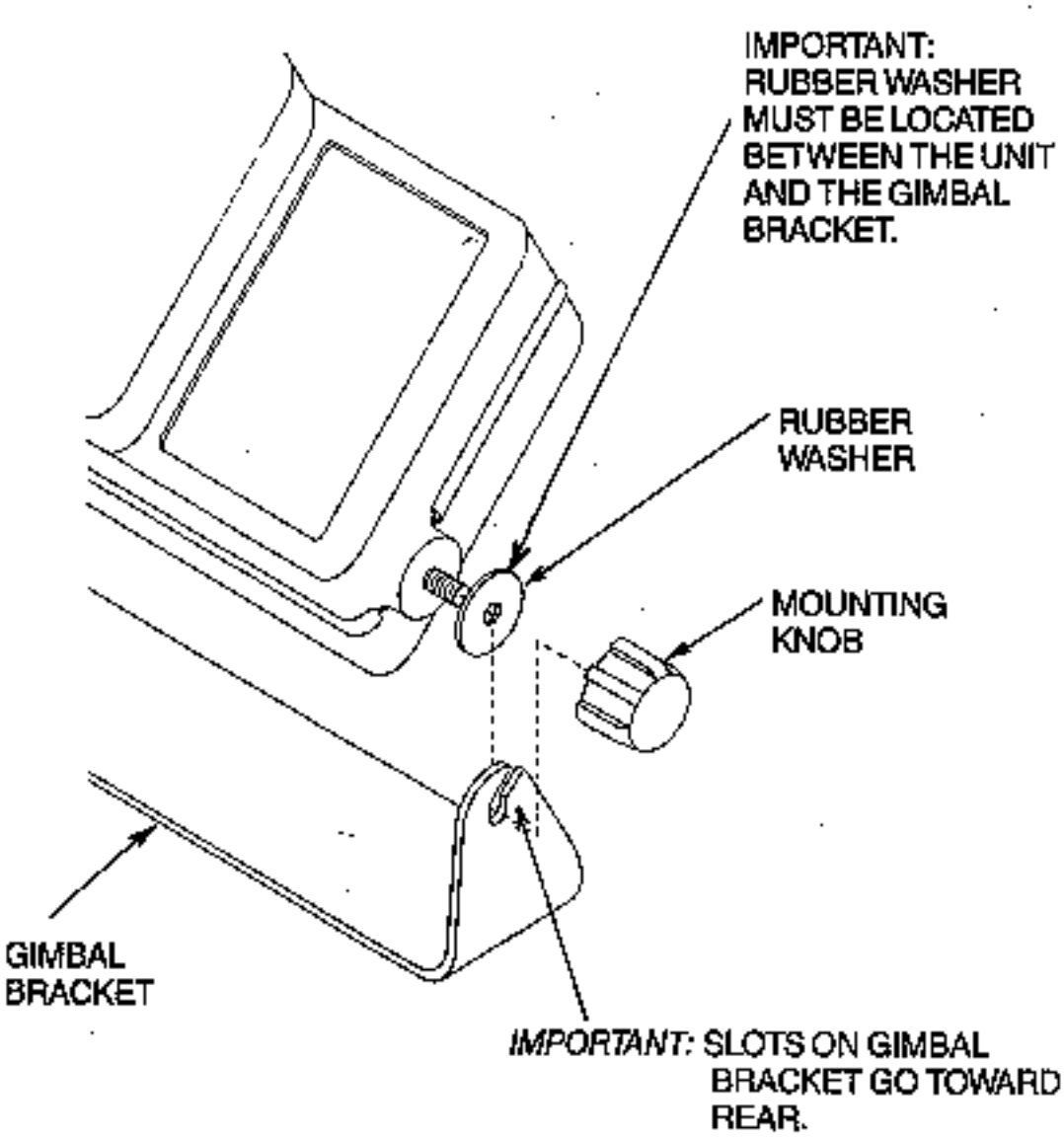

FIGURE 10

OTHER MOUNTING OPTIONS

1. The LCR gimbal bracket can also be mounted on the SM-4, quick disconnect swivel mount.
2. The LCR gimbal bracket can also be mounted directly to the dash without the swivel mount, however, this method is not recommended since the unit cannot be rotated.

INSTALLING THE CABLES

Your LCR comes equipped with Humminbird's new Angle-Lock power and transducer connectors. The power connector is identified with the letter P on the back of the plug.

It plugs into the outlet on the back of the unit marked “Power”. The transducer connector is identified with the letter T and plugs into the outlet on the back of the unit marked “Transducer”. Note: An adapter (AD-4) is available to allow use of an old waterproof (BNC) transducer with the LCR, but be sure that the transducer is a 16degree. A 32 degree transducer cannot be used.
A 11/8” hole must be drilled to pull through the transducer connector. After drilling the hole, pull the transducer connector up through the hole. If you are installing two units, both transducer connectors can be pulled through this 1 1/8” inch hole. Next, push the power cable wires down through the hole. A hole cover has been provided which will dress and hold the wires. Install the hole cover after determining the necessary wire length from the hole.
The power cable has a red lead to the positive (+) post and the black lead to the negative (-) post. Install a 1 amp fuse between the red cable and positive post of your 12-volt battery.
If a fuse panel is available, we recommend wiring the power cable into the fuse panel. Note: The LCR must be fused separately from any other accessory.
Your Angle-Lock connectors can only be plugged in one way. Position the connector so the letter P or T can be read and the 90 degree bend is pointed downward. Push the connector in as far as it will go. Turn the positive locking ring as far as it will go clockwise until you feel it lock. locking ring as far as it will go clockwise until you feel it lock. Your connector is now locked into place.
Note: For easy access to the connectors, simply loosen the mounting knobs and tilt your LCR forward. The connectors are now in full view and easy to plug or unplug.

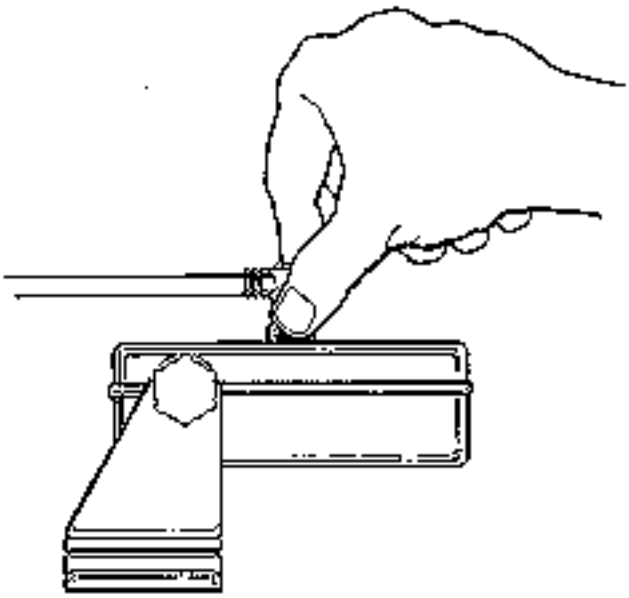

TOTAL SCREEN UPDATE

What is Total Screen Update?

Total Screen Update is a unique feature of the LCR3000. It will allow you when changing depth scales, to totally change or update the screen to the new depth scale. It will also allow you to zoom in and look at information in much finer detail even after you’ve already gone over the area.

How does Total Screen Update Work?

Inside the LCR3000 are memory devices, which can store approximately 60,000 bits of information. Automatically, while you’re operating the LCR3000, the computer is putting information into the LCR’s memory. This stored information as all the data from zero to 180 feet.

All this information (from 0 to 480 ft.) is being recorded to no matter what depth-scale you are using. Also, the information is being put into memory in much smaller increments (pieces) than is being

displayed on the normal 0 to 30, 0 to 60, 0 to 120, 0 to 240, or 0 to 480 foot scales. For example, on the 0 to 60 foot scale each dot is equal to one foot of depth, but the computer is putting information into memory such that each dot equals 3 inches.

If after reading this, you don't understand all about how the LCR3000's Total Screen Update works, don't worry. This important thing is that you understand how to use Total Screen Update. Read on…

How to use Total Screen Update

This is the easiest part. Since the LCR's computer is doing all the work, you will find the LCR3000's Total Screen Update very easy to use. There are two ways you will use Total Screen Update:

1. When changing a depth scale, the LCR's computer will automatically change or update the entire screen to the new depth scale.

   In Figure 12 the depth scale is being changed from the 0 to 30 foot scale to the 0 to 60 foot scale.

   Note that the display was changed to show the entire screen on the 0 to 60 foot scale.

   Note that the display was change to show the entire screen on the 0 to 60 foot scale.

   This Total Screen Update feature works when changing to shallower scales, too. For example, suppose you are in the 0-480 foot scale but the bottom depth is only 10 feet. When you change to the 3 to 30 foot scale, the entire screen will look just as if you had gone over the area on the 3 to 30 foot scale.
2. The other way that you will use the Total Screen Update is in operating the LCR3000's Zoom. Since the computer has stored in memory information for 0 to 480 feet in very small increments, you will be able to recall this information from memory to get an expanded view of areas which you have already passed over.

   For example, if you go over some interesting structure or fish, you will be able to zoom in for a closer look without going back over the area. Simply activate the zoom and the information that is stored in memory will be recalled and displayed on the screen.

   The operation of the zoom function is explained in a later section.

<u>OPERATIONAL INSTRUCTION FOR LCR3000</u>

The hummingbird LCR3000 will operate fully automatic or manual at the discretion of the operator. At the heart of the LCR3000 is a microcomputer which is making thousands of decisions every second. With the LCR3000's automatic features you will quickly and easily learn the basics of operating your unit and after a couple of the trips on the water you'll be operation the LCR3000 like an expert. It is suggested that you familiarize yourself with each of the features and controls prior to operating your LCR3000.

1. Power: To activate the unit, depress the Power "On" switch. The LCR3000 always comes on in the automatic mode. In the automatic mode, the unit will find the bottom by varying the sensitivity and selecting the proper depth range for a satisfactory return. Also, the display below the bottom is blacked out to make the display easier to read.

   To turn the unit off, depress the Power "off" switch.
2. Depth: In the automatic mode, the proper depth ranged is found as soon as the unit is turn on. As you move into deeper water and the bottom goes off the screen, the next deeper depth range will automatically be activated. Also, as water becomes shallower (when bottom is about 10 dots from the top of screen) the depth range will automatically change to

the next shallower scale. You may manually change the range by depressing the depth "set" button. Each time this button is depressed, the range is decreased by one setting.

Note: Should you attempt to change to a depth scale which is less than the actual bottom depth, the computer will automatically change the depth scale back to the proper position. For example, if you are in 40 feet of water and you change the depth scale to 30 feet, the computer will automatically change back to the 60 foot scale.

In the *Manual Mode* (See Paragraph 5 below) the automatic range change is not active. This means that you must manually set the depth scale. For example, if you are on the 0-30 foot scale and the bottom goes from 25 feet to 35 feet, you would press the depth set button four times to go from 0-30 to 0-480 to 0-240 to 0-120 to 0-60 foot scale. The bottom would then be displayed at 35 feet.

The depth range is always displayed at the bottom of the LCR display. The LCR3000 has five depth ranges, 0-30', 0-60', and 0-120', 0-240' and 0-480'. The graduated depth scales down the left and right side of the display will identify the proper depth based upon the range you are on at the time.

Remember that because of the LCR3000's Total Screen Update feature, information is automatically being put into memory in smaller increments (pieces) than is being displayed on the normal depth scales (see explanation of Total Screen Update earlier in manual). This means, for example, that even though you are on the 0 to 480 ft. scale, when you change to the 0 to 30 ft. scale all along. No information or resolution is lost.

3. Light: Depress the light "On/Off" switch to activate the display light for night or low light conditions. The light is turned off by again depressing the "On/Off" switch.
4. Set: The LCR3000 has two Set buttons labeled (upper arrow sign) (increase) and (lower arrow sign) (decrease). These buttons are used to change four functions:
    1. Zoom Range
    2. Manual Sensitivity Level
    3. Alarm Depth Setting
    4. Display Sweep Speed

   Each of the buttons should be pressed and then the (upper arrow sign) or (lower arrow sign) to increase or decrease the funtion.

5. Sensitivity: *Automatic Mode*- Each time the unit is turned on, the automatic feature is on. In the automatic mode the sensitivity is adjusted automatically to give a good return and the correct depth range is selected. The word Auto will appear in the upper right hand corner of the display any time the unit is in the automatic mode. The sensitivity bar at the top of the screen will increase or decrease automatically indicating the amount of sensitivity being used. In deeper water or soft bottom conditions this bar will increase indicating more sensitivity. In shallow water or when a hard bottom is being read, the sensitivity needed to achieve a good return will be less. Also in the automatic mode, the unit will black out the display beneath the bottom line.

   Manual Mode-There are two ways of putting the LCR3000 in the manual mode: (1) depress the Auto "On/Off" button or (2) depress manual set and either the decrease (down arrow sign) or increase (upper arrow sign) button. You will notice that the word "Auto" in the upper right hand corner of the display has gone off. The operator can control the amount of sensitivity by depressing the (lower arrow sign) or (upper arrow sign) button. There are 15 sensitivity settings. When the (lower arrow sign) or (upper arrow sign) button is pressed once, the sensitivity settings at the top of the screen will change by one division. If the (lower arrow sign) or (upper arrow sign) button is held down the setting will move up or down as long as the button is held down. When

the maximum or minimum setting is achieved, the unit will make a "Chirping" sound indication a limit has been reached.

In the manual mode everything below the bottom is no longer blacked out, therefore a second return or double echo can be displayed if desired. (See Figure 13). Also, the hardness of the bottom can be determined by the thickness of the bottom return. For example, a hard or rock bottom will give a wider bottom return as compared to a soft or muddy bottom. (See Figure 14).

Note: You will find the manual sensitivity control most useful when looking for smaller targets such as smaller fish. In the automatic mode the computer might not be using enough sensitivity to show smaller targets. At higher sensitivity settings more targets will be seen. Therefore, you might want to use the automatic mode while running and then use the manual mode for charting and finding fish.

You should also note that it is possible to have the sensitivity set too high such that reflection off of suspended matter or air bubbles will begin to black out the display.

In the manual mode the depth scale does not change automatically (See paragraph 2 under *Manual Mode).* To once again activate the automatic mode, depress the Sensitivity Auto "On/Off" switch.

6. Display: Stop/Resume: Anytime during the operations of the LCR, the operator may "freeze" the display by simply pushing the display "Stop/Resume" button. This feature will aid in the learning and interpretation of the signal on your LCR display by giving you time to study the display. The "Stop/Resume" will not change any original settings when once again activated. Then sensitivity and display speed **cannot be changed while the display is stopped.**

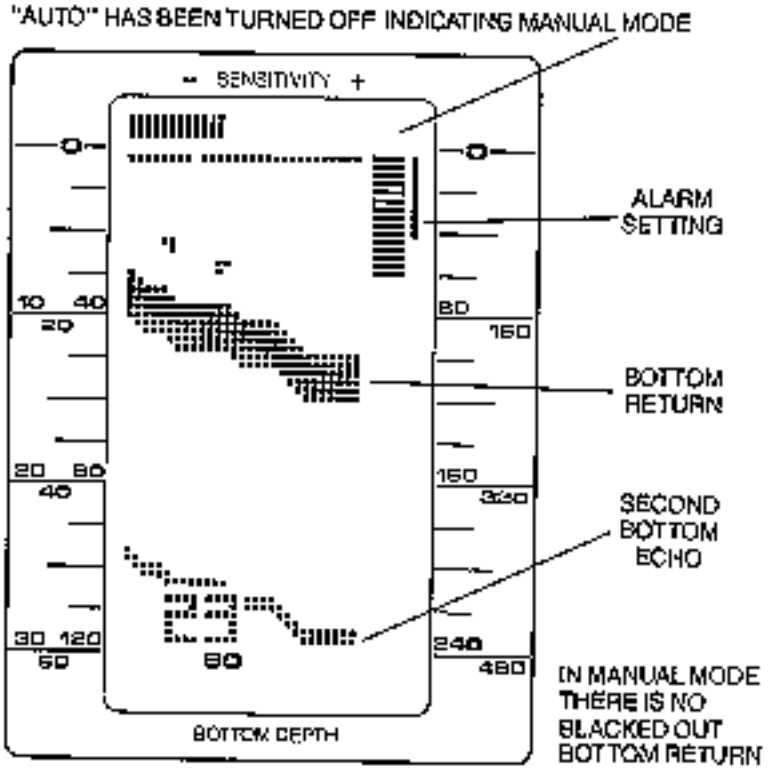

FIGURE 13

If they are pressed, a chirping sound will indicate that these functions cannot be changed while display is stopped. All other functions, such as Zoom and Depth Scales, are active with the display stopped. When the “Stop/Resume” button is pressed again the unit will resume reading at the immediate point at which the boat is sitting in the water.

7. Alarm: The LCR3000 is equipped with an audible alarm, which when activated will advise the operator of the presence of fish, structure or shallow water.

The alarm is activated by pushing the alarm “On/Off” button. When first activated, the alarm is set at five feet. The desired alarm depth can be adjusted up or down by pressing the depth set button and then the increase (upper arrow sign) or decrease (lower arrow sign) button.

When the increase or decrease button is pressed once, the alarm setting will change one division. If the button is held down the setting will move as long as the button is held down. The alarm setting is indicated down the right hand side of the display (se fig. 13). It is possible to set the alarm anywhere between the 4’ to the 480’ range. When the bottom enters the alarm range it will trigger a continuous audible signal. Fish, which enter the alarm range will trigger a short alarm. Therefore, if you want to use the alarm feature to locate fish simply set alarm close to the bottom and listen for the short alarm indication.

The alarm depth will adjust itself when the depth range changes from one scale to another. Thus a depth alarm set at ten feet while on the 30 foot depth scale will remain at ten feet deep should the unit advance to the 60 foot scale. Note: To set the alarm with the most accuracy set it using the lowest scale. For example, for a ten foot alarm setting, use the 0-30 foot scale to set in ten feet exactly. Turn off the alarm by again pushing the Alarm “On/Off” button. The alarm setting will then go to zero. If the alarm is turned on again before the unit is turned off, it will still be set at the previous setting.

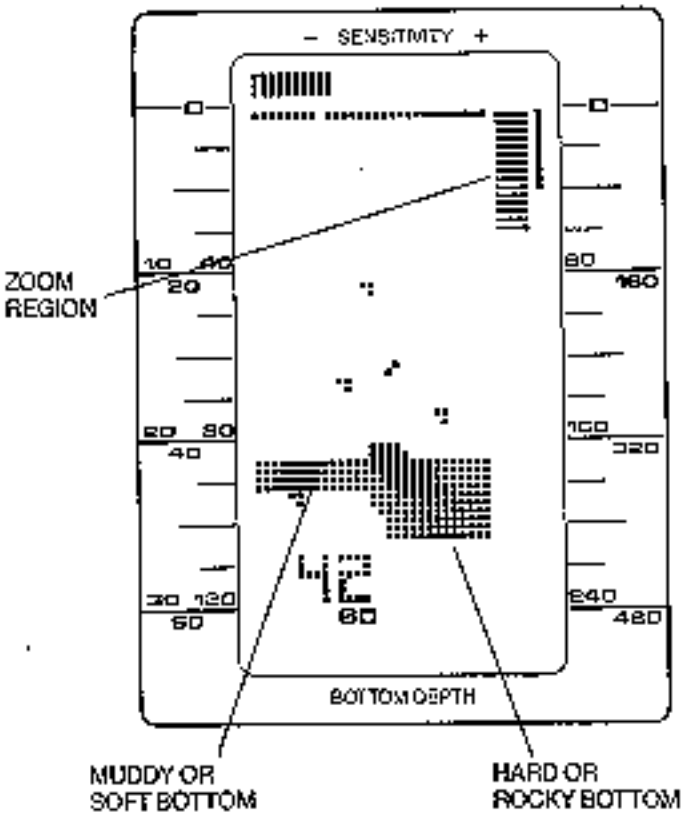

FIGURE 14

8. Zoom: You will find the Zoom feature if the LCR3000 to be a very valuable too. The Zoom Range is controlled by the set and (upper arrow sign) or (lower arrow sign) Buttons. Each time one of these buttons is depressed to zoom regions will move on division. If the button is held down the region will continue to move as long as the button is held down.

The zoom region is indicated by the group of bars at the right side of the display (see fig. 14). This region may be selected as 15 ft., 30 ft. or 60 ft. by pressing the 15/30/60 range button. Note: On the 0 to 30 ft. scale only a 15 ft. zoom scale can be selected, and on the 0-60ft. scale only the 15 ft. or 30 ft. zoom scale can be selected.

The table below shows the resolution at each zoom range:

Zoom Range	*Each Dot*
15 ft.	3 inches
30 ft.	6 inches
60 ft.	1 ft.

What Zoom Does

The zoom feature on the LCR3000 will allow you to look at underwater readings in very fine detail and with the LCR3000's Total Screen Update you have the capability to zoom in on the bottom, fish and structure, even after you have gone over an area.

How To Use Zoom

First, position the Zoom Region (see fig.15) next to the area that you want to expand by pressing the set and up (upper arrow sign) or down (lower arrow sign) button. Next, by pressing the Zoom On/Off button the Zoom will be

activated. You will notice that the letter Z appears in the lower right hand corner of the display, indicating that the Zoom is on. You will also notice that the entire screen has been changed to show an expanded view of the area from the tip of the Zoom Range to the bottom of the Zoom Range. The LCR3000's Total Screen Update feature allows you to zoom in on an area even after you have passed over it. Figure 15 show two screen, one with Zoom off and one after turning Zoom on.

The Zoom may be activated at any time (during normal transmitting and receiving or stop action), but while learning to use the Zoom feature you might find it easiest to first press the Stop/Resume button to freeze the display. Now you can position the Zoom Range, activate to Zoom, and study the display. By pressing Zoom On/Off button again you can go back to the un-expanded or normal display. Going back and forth several times will help you in understanding exactly what you are seeing with the Zoom activated.

Some Additional Things You Should Know About Zoom

A. While the Zoom is turned on you can move the Zoom Range up and down. This will allow you to search or look at an entire are in fine detail.
B. The Zoom Range indication at the right of the display can be used for depth reference. For example in Figure 15 the Zoom Range is set between 33 feet and 48 feet. This means that when the Zoom is activated that you are looking at an expanded view of the area from 33 feet to 48 feet.
C. While the Zoom is turned on, you cannot change Sensitivity, Depth, Scale, or Display Speed. If you press any of these buttons while Zoom is on, a chirping wound will occur indicating an incorrect entry.
D. If you want to zoom in along the bottom while the bottom depth is changing, you can easily maintain the position on the bottom by pressing the set and up (upper arrow sign) or down (lower arrow sign) buttons.
E. Using the Zoom you can actually have a 0 to 15 foot scale on your LCR3000. To do this first position the Zoom Range as far up as it will go on the 0 to 30 ft. scale. Now turn on Zoom. The full screen is now a 0 to 15 foot scale.
F. Remember that because of the LCR3000's Total Screen Update feature, the information from 0 to 480 feet is always being recorded in memory. This means that even while you are using Zoom, no information is being lost. You can turn Zoom off, go to any depth scale and see all the information just as if you had been on that depth scale all along.

9. Display Speed: The LCR3000 has a total of eight display speeds. When the unit is turned on the display will be advancing at a medium speed. To increase the display speed, depress the Speed Set and (upper arrow sign) or hold it down to change rapidly. An audible sound is heard each time the speed is advanced. When the limit has been reached a chirping sound will be heard. At this point the speed will be advancing at its maximum. To decrease the speed, simply depress the Speed Set and (lower arrow sign) until the desired advance is reached.
10. Digital bottom reading: The digital bottom depth is displayed in the lower left area of the screen. This digital reading will operate in depths of 4 feet or more while the unit is in the automatic mode, on any depth scale or with zoom activated. **The digital bottom reading will not be seen while in the manual mode.**

Some additional thins you should know about the LCR3000:

- Some polarized glasses might affect your view of the LCR display. It could result in a prism or rainbow effect. This condition can possibly be improved by a slight adjustment in tilt.
- *If you get confused* while in the manual mode, for instance, if you don't know where the bottom is, then press the auto on/off button to turn on the automatic mode. The LCR3000 will find the bottom by selecting the proper sensitivity level and depth scale. You can then go back to the manual mode if desire.

- In order for your LCR to operate well at high speeds, you must have a *properly mounted transducer*. Please read the transducer mounting procedure carefully.
- The transducer for the LCR3000 is at 16 degrees, just like most standard Hummingbird flasher units. Other transducers, such as 32 degrees, *cannot* be used.
- Low profile swivel moutn is standard on all LCR models, or the LCR can be used with Hummingbird SM-4 for quick removal.

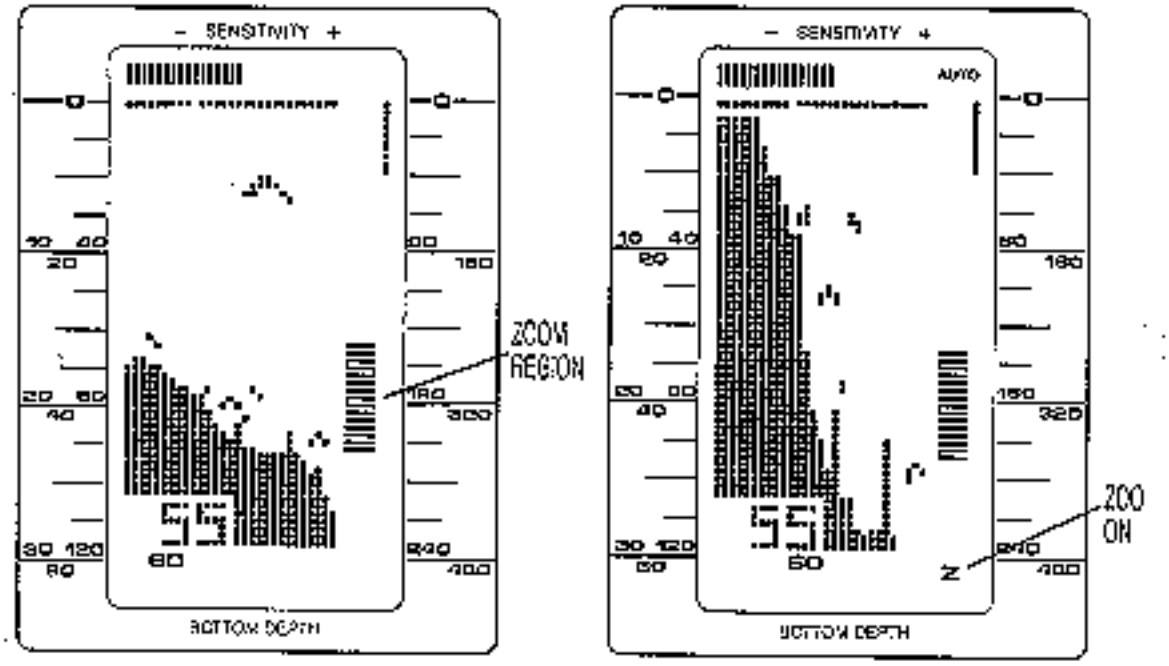

ZOOM OFF (0 to 60 Ft. Scale)

ZOOM ON (from 33 Ft. to 48 Ft.)

FIGURE 15

CARING FOR YOUR LCR:

Since your Humminbird LCR is completely waterproof, it can be cleaned with soap and water or hosed off after salt water is used with no fear of damage to the unit or its electronics. When cleaning the lens, it is suggested you use a chamois cloth and a non-abrasive cleaner such as Windex. Do not wipe while dirt or other gritty material is on the lens. Care should be exercised to avoid scratching the lens.

AS with any electrical instrument, do not leave your LCR on the dash board or rear window area of he car. The sun can create extremely high temperatures which can damage the case and internal components. During extended periods of non-use, such as winter, you should store the LCR and other removable depth sounders in the house, or garage. This will help prolong the good appearance and operation of these instruments.

LEARNING TO USE YOUR LCR:

Step 1
After making sure that you are in water deeper than four feet, turn your LCR on by pushing the “On” button. The LCR’s computer will automatically adjust the sensitivity and depth scale so that in about one second you will see images appear on the right side of the display and moving to the left. The small gap in the zero line allows you to see movement on the display even when the button is not changing.

TROUBLE SHOOTING:

If nothing happens when the “On” button is pushed, check your electrical connections and fuse. Also check that the red wire on the power cable is connected to the positive battery terminal and that the black wire is connected to the negative battery terminal. If these wires are reversed it will not damage the LCR.
It is normal if when reversing the boat, the bottom return is lost, since air from the prop is being forced under the transducer. Remember the transducer cannot transmit through air.

TROUBLE SHOOTING:

If the display comes on when the “On” button is pushed but no bottom information is seen, check that the transducer connector is securely locked to the rear of the LCR. Also insure that the transducer is completely submerged. A transducer cannot work properly in air or through air bubbles in the water.

TROUBLE SHOOTING:

In very shallow water, the bottom reading might have gaps or the scale might change to the 0-120 foot scale. This is normal in about three feet or less. The automatic mode cannot “lock” onto the bottom in very shallow water.

Step 2
Still moving at a slow speed, begin going toward deeper water. You will see that the LCR will display changes as small as 6 inches on the 0-15 foot scale. Continue to move into deeper water until the bottom return goes off the display. The LCR will automatically change to the next deeper depth scale (indicated at bottom of the display).

Step 3
Press the depth set button once to change to the next lowest scale. If the bottom is deeper than this scale, the computer will automatically change back to the proper scale. By pressing the depth set button three or four times you will see that the depth scale will change down to the 0 to 15 foot scale and then to the 0 to 120 foot scale.

Step 4
Steps 1, 2, and 3 have verified that your LCR is working properly. You are now ready to increase boat speed to test the transducer installation. As you increase the boat speed the LCR should give a continuous bottom return. With a proper transducer installation your LCR will perform well at speeds over 75 mph.

TROUBLE SHOOTING:

If at high speeds the bottom return is not continuous or there are gaps in the bottom, then the transducer installation or location is such that air is going under the transducer face. Remember that a transducer cannot work properly through air or air bubbles in the water. The Inside Hull Mount and Kick-Up Mount are best for high speed operation. Refer back to the transducer mounting procedure for adjustments or for other mounting options.

TROUBLE SHOOTING:

If when making a hard turn, the bottom reading is lost, it is the result of the transducer coming out of the water during the turn.

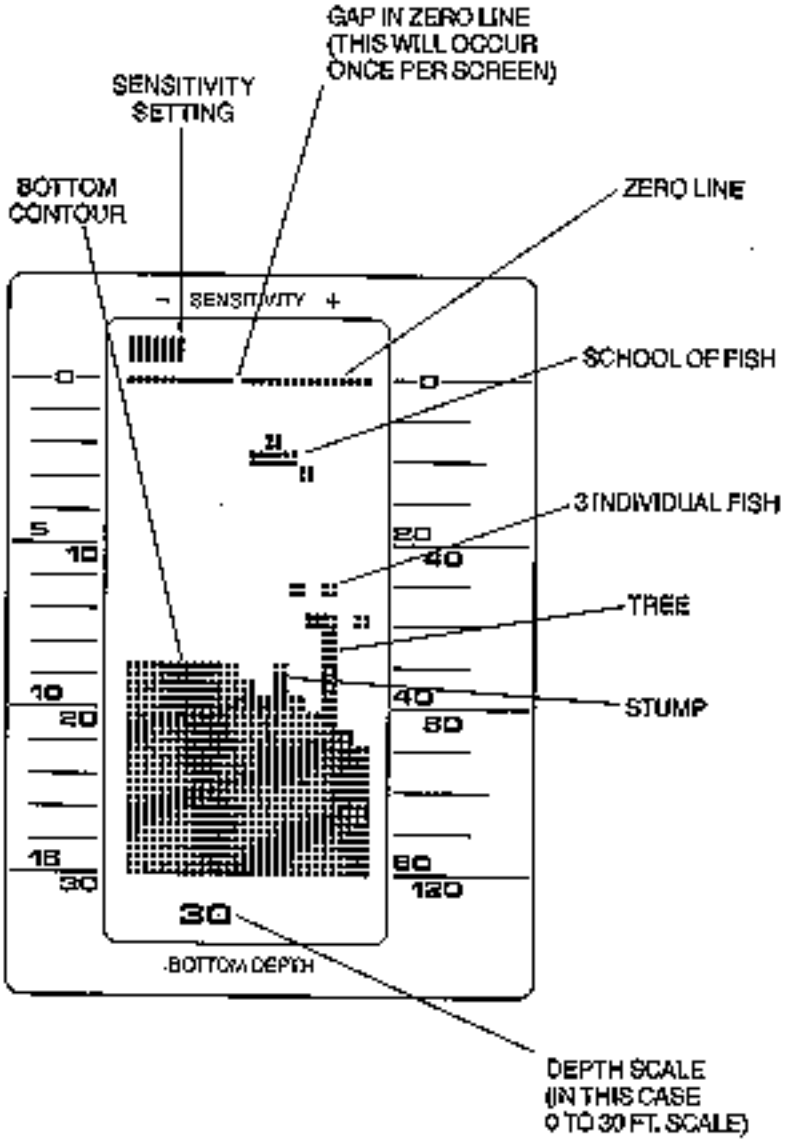

FIGURE 16A

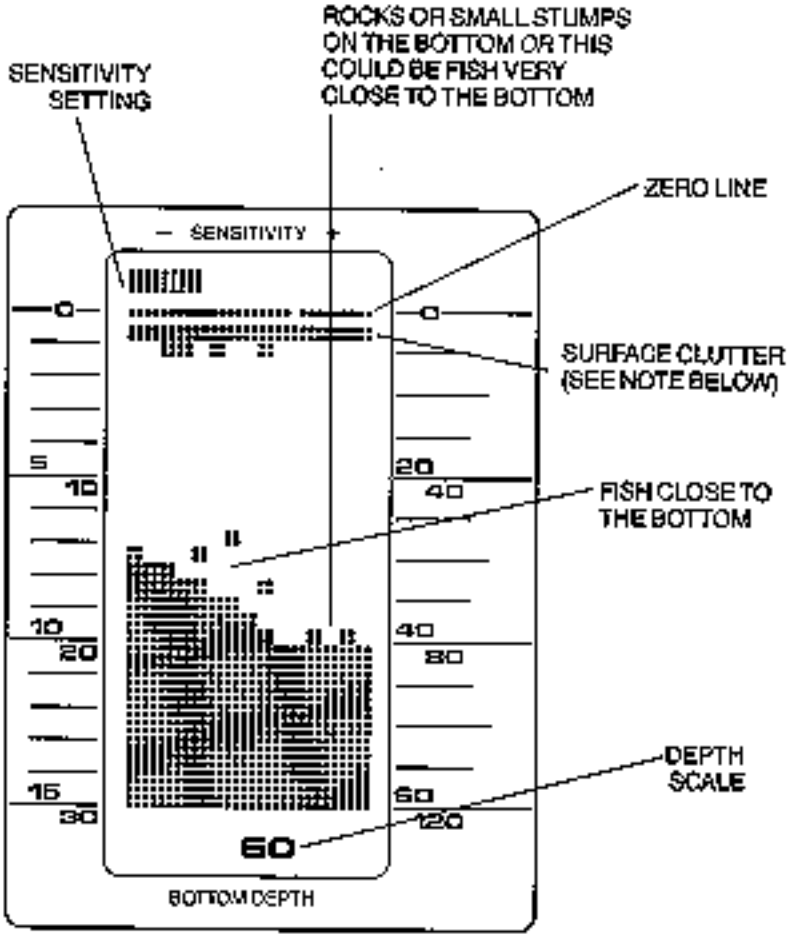
ROCKS OR SMALL STUMPS ON THE BOTTOM OR THIS COULD BE FISH VERY CLOSE TO THE BOTTOM
SENSITIVITY SETTING
ZERO LINE
— SENSITIVITY +
SURFACE CLUTTER (SEE NOTE BELOW)
FISH CLOSE TO THE BOTTOM
DEPTH SCALE
0
5
10
10
20
15
30
0
20
40
40
80
60
120
60
BOTTOM DEPTH

FIGURE 16B

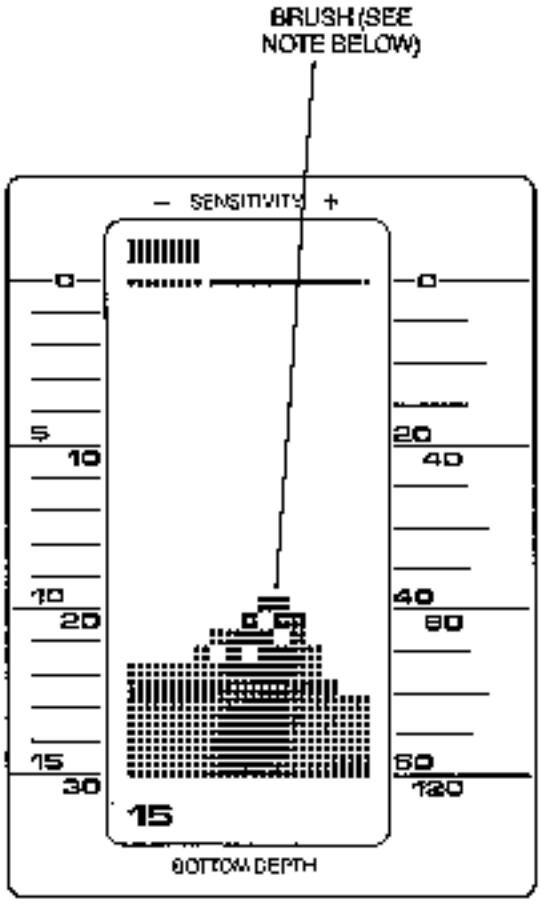
BRUSH (SEE
NOTE BELOW)
– SENSITIVITY +
0
5
10
10
20
15
30
0
20
40
40
80
60
120
15
BOTTOM DEPTH

FIGURE 16C

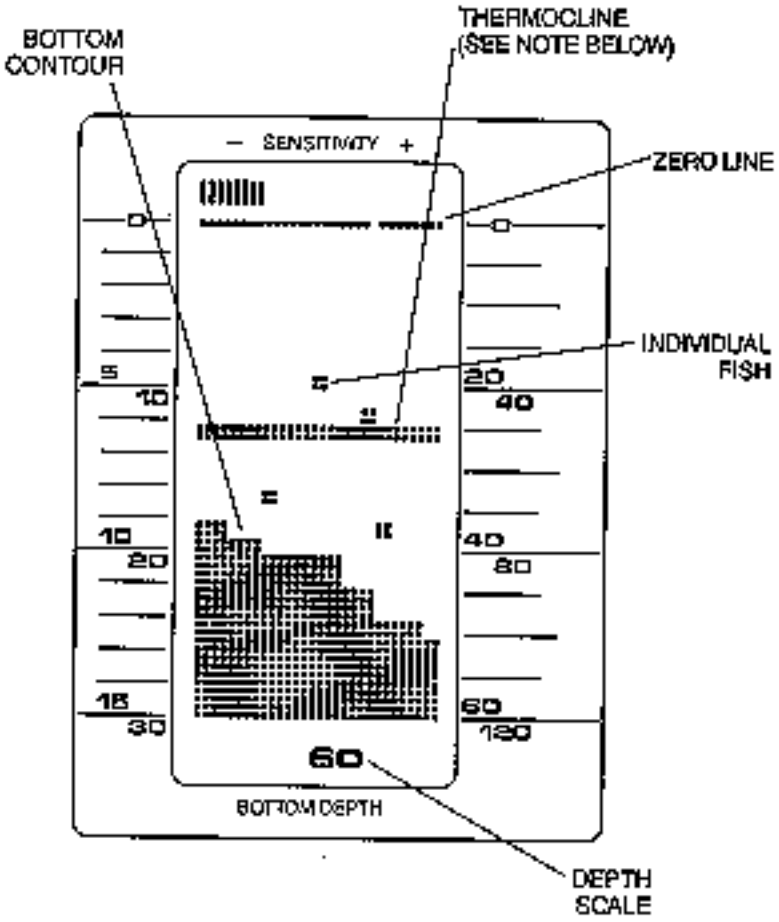

FIGURE 16D

Other Humminbird LCR's

The top of the line that bridges the gap between flashers and chart recorders- this is the incredible new LCR 4000. It is undoubtedly the most intelligent depth sounder ever created. The LCR 4000 uses the most advanced microcomputer technology in existence, but that doesn't make it more complicated. In fact, LCRs are the depth simplest, most effortless depth sounders on the market because of their unique automatic features. With four depth ranges and sensitivity controls, the LCR 4000 does offer the option to manually fine tune, if you prefer, and its zoom feature with memory and Total Screen Update provides the most accurate, up close readings in marine electronics. It's the creation of a new generation- Humminbird's LCR 4000.

SHOULD YOU NEED SERVICE
If, after reading the troubleshooting guide, you determine your Humminbird needs factory service, please attach the following information to the unit and send it to the address below.

Please print your:
Name, street address, city, state, zip code, home phone no.., work phone no.
Briefly describe the problem

Units will be repaired and returned via Federal Express
All units out of warranty will be returned C. O. D.

If you are including a check, please attach it to the unit.

TECHSONIC INDUSTRIES, INC.
Service Dept.
Three Humminbird Lane
Eufaula, AL 36027