530759-2_C

Flush Mount Transducer

Overview

Following are instructions for the installation of this accessory. Before you start installation, we encourage you to read these instructions carefully in order to get the full benefit from your Humminbird® accessory.

Customer Service: If you find that any items are missing from your installation kit, visit our Web site at **humminbird.com** or call Customer Service at **1-800-633-1468**.

> ***NOTE:*** *This transducer requires drilling a hole in the hull of the boat; therefore, installation should be performed by a qualified marine technician.*

Supplies: In addition to the hardware supplied with your transducer, you will need a drill, a small drill bit for a pilot hole, a 2" hole saw and marine-grade silicone sealant or slow curing epoxy.

Thru-Hull Installation

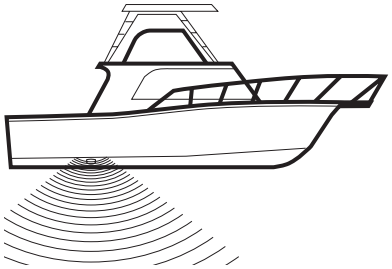

Installation

Perform the procedures in the following sections to install the transducer on your boat.

1. Test the Transducer Prior to Installation

Prior to installation, test the transducer to make sure that no damage occurred during shipping.

1. After connecting the transducer to the control head, hold the transducer in the water over the side of the boat to confirm proper operation. If the transducer is working properly, you should be able to see the bottom on the control head display. The bottom image should be relatively strong and there should be detailed structure on the display.

2. Locate the Transducer Mounting Position

Outside the boat: The best location for the transducer will be aft midship, as close to the centerline of the boat as possible.

- The transducer should be mounted forward of the propellers on inboard boats, and separated adequately from other transducers, strakes, rivet lines, or other protrusions.
- Make sure that there is nothing in front, behind or to the side of the transducer that is closer than 12". Inside the boat, there must be room to access the mounting location for installation and cable routing.

Inside the boat: There must be room to access the mounting location for installation and cable routing.

Deadrise: If the selected mounting location has a hull deadrise angle of 10 degrees or greater, a fairing block should be used to level the transducer housing and direct the sonar signal straight down.

> ***NOTE:*** *When installing this transducer on a trailerable boat, be sure the transducer is free of all obstructions. Using a fairing block for this transducer is not recommended for a trailerable boat.*
>
> ***NOTE:*** *If you cannot find a location that will work for your application, a different mounting technique or transducer type should be considered. Visit our Web site at* ***humminbird.com*** *or contact Customer Service at* ***1-800-633-1468*** *for more information.*

3. Attach the Transducer

Before attaching your transducer, you will need to decide which type of installation to use:

- **For a standard installation, where the deadrise is less than 10 degrees**, you do not need to use a leveling block because the transducer will be mounted directly to the hull. Drill the hole perpendicular to the hull.
- **For an installation where the deadrise is greater than 10 degrees,** use a suitable leveling block (not included), cut at the appropriate angle, to compensate for the deadrise. Drill the hole perpendicular to the waterline.

1. From the outside of the hull, drill a small pilot hole (smaller than the centering bit of your drill bit or hole saw), at the mounting location you selected in procedure 2.

   CAUTION! *Before you drill, make sure you are drilling in the correct orientation according to the installation guidelines above.*

2. Use the pilot hole (from the outside of the hull) to drill a hole sized to fit the threaded stem of the transducer.

   NOTE: *If you are mounting the transducer body directly to the hull, drill the hole perpendicular to the hull.*

   NOTE: *If you are using a leveling block, drill the hole perpendicular to the waterline.*

3. Thoroughly clean and deburr the drilled hole and clean the outside of the hull.

4a. If you are not using a leveling block, skip to step 5.

OR...

4b. If the hull angle is greater than 10 degrees, you should use a leveling block (not included) to level the transducer. The block (usually made of wood) should be cut to match the angle of the deadrise of the hull. You should cut the leveling block into two equal pieces: one which mounts outside the hull and is shaped to match the profile of the transducer, and one which mounts inside the hull and provides a level surface for the fasteners. The thinnest wall of the outside level block must be at least 1/8".

   NOTE: *A separately-purchased fairing block can also be used to create a hydrodynamic waterflow around the transducer body. A fairing block is required for round body transducers as well. The design and fabrication of this block varies greatly with different hull shapes; therefore, it should be customized by a qualified marine technician.*

5. Feed the cable through the hole, then temporarily install the transducer to check the fit.

6. Apply a generous amount of marine-grade silicone sealant or slow-curing epoxy inside the drilled hole and along the mating surfaces of the transducer housing. Seal the mating edges of the leveling block (if using one) as well.

7. Insert the transducer into the drilled hole from outside the boat, then install the nut onto the threaded stem from inside the boat.

   NOTE: *If you are using a leveling block outside the hull (to correct for deadrise), you must use a similar block inside the hull to provide a level bearing surface.*

8. Tighten the nuts to 10 ft/lbs or use moderate pressure on an adjustable wrench.

   CAUTION! *Do not overtighten the nuts, especially if you are using a leveling block made of wood, as the block will swell when wet.*

9. Remove the excess adhesive sealant from the outside of the hull to ensure smooth water flow over the transducer.

4. Route the Cable

The transducer cable must be routed to the point where the fishfinder is mounted.

NOTE: *Your boat may have a pre-existing wiring channel or conduit that you can use for the transducer cable.*

1. Unplug the other end of the transducer cable from the control head.

   CAUTION! *Do not cut or shorten the transducer cable, and try not to damage the cable insulation. Route the cable as far as possible from any VHF radio antenna cables or tachometer cables to reduce the possibility of interference. If the cable is too short, extension cables are available to extend the transducer cable up to a total of 50'. For assistance, contact Customer Service at* ***humminbird.com*** *or call* ***1-800-633-1468*** *for more information.*

   CAUTION! *Do NOT mount the cables where the connectors could be submerged in water or flooded. If cables are installed in a splash-prone area, it may be helpful to apply dielectric grease to the inside of the connectors to prevent corrosion. Dielectric grease can be purchased separately from a general hardware or automotive store.*

2. Connect the extension cables to the transducer cable and route the cable to your control head.

3. Route and secure the cable, avoiding areas where it may be damaged or interfere with normal boating operations.

Attaching the Transducer

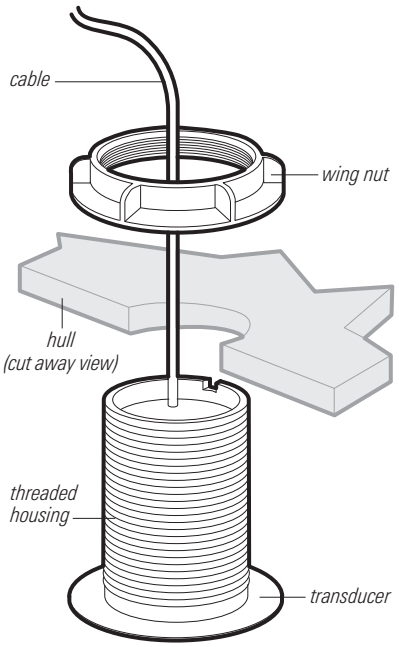

Leveling Block Assembly to Hull

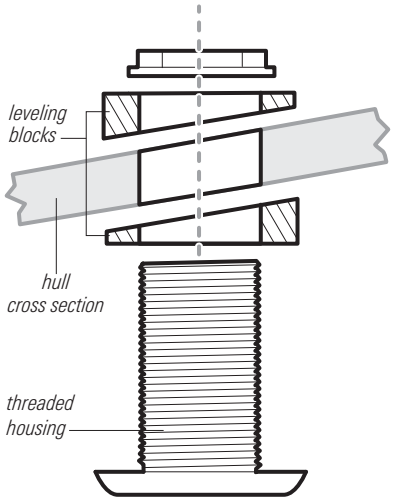

Maintenance

If your boat remains in the water for long periods of time, algae and other marine growth can reduce the effectiveness of the transducer. Periodically clean the face of the transducer with a mild, marine-safe and plastic-safe soap or solution.

If your boat remains out of the water for a long period of time, it may take some time to wet the transducer after it is returned to the water. Small air bubbles can cling to the surface of the transducer and interfere with proper operation. These bubbles will dissipate with time, or you may wipe the face of the transducer with your fingers after the transducer is in the water.

1-Year Limited Warranty

We warrant the original retail purchaser that products made by Humminbird have been manufactured free from defects in materials and workmanship. This warranty is effective for one year from the date of original retail purchase. Humminbird products found to be defective and covered by this warranty will be repaired or replaced free of charge at Humminbird's option and returned to the customer freight prepaid. Humminbird's sole responsibility under this warranty is limited to the repair or replacement of a product that has been deemed defective by Humminbird. Humminbird is not responsible for charges connected with the removal of such product or reinstallation of repaired or replaced parts.

This warranty does not apply to a product that has been:

- Improperly installed;
- Used in an installation other than that recommended in the product installation and operation instructions;
- Damaged or has failed because of an accident or abnormal operation;
- Repaired or modified by entities other than Humminbird.

Please retain your original receipt as a proof of the purchase date. This will be required for in-warranty service.

THIS WARRANTY IS EXPRESSLY IN LIEU OF ANY OTHER WARRANTIES, OBLIGATIONS OR LIABILITIES ON THE PART OF HUMMINBIRD AND WILL BE THE CUSTOMER'S EXCLUSIVE REMEDY, EXCEPT FOR ANY APPLICABLE IMPLIED WARRANTIES UNDER STATE LAW WHICH ARE HEREBY LIMITED IN DURATION TO ONE YEAR FROM THE DATE OF ORIGINAL PURCHASE. IN NO EVENT WILL HUMMINBIRD BE LIABLE FOR ANY INCIDENTAL OR CONSEQUENTIAL DAMAGES FOR BREACH OF ANY EXPRESS OR IMPLIED WARRANTY RELATING TO THE PRODUCTS.

Some states do not allow limitations on an implied warranty, or the exclusion of incidental or consequential damages, so the above exclusions may not apply to you. You may also have other rights, which vary from state to state.

Humminbird Service Policy

Even though you'll probably never need to take advantage of our incredible service policy, it's good to know that we back our products this confidently. We do it because you deserve the best. We will make every effort to repair your unit within three business days from the receipt of your unit at our factory. This does not include shipping time to and from our factory. Units received on Friday are typically shipped by the following Wednesday, units received Monday are typically shipped by Thursday, etc.

All repair work is performed by factory-trained technicians to meet exacting factory specifications. Factory-serviced units go through the same rigorous testing and quality control inspections as new production units.

After the original warranty period, a standard flat rate service charge will be assessed for each repair (physical damage and missing parts are not included). Any repairs made after the original warranty will be warranted for an additional 90 days after service has been performed by our factory technicians. You can contact Customer Service or visit our Web site to verify the flat rate repair fee for your product (visit the Product Support section):

http://www.humminbird.com

We reserve the right to deem any product unserviceable when replacement parts are no longer available or impossible to obtain. This Service Policy is valid in the United States only. This applies only to Humminbird products returned to our factory in Eufaula, Alabama. This Service Policy is subject to change without notice.

DOMESTIC (USA) CUSTOMERS:
PLEASE DO NOT RETURN THIS PRODUCT TO STORE FOR SERVICE
For all technical issues please call **1-800-633-1468**
or visit **www.humminbird.com**, click **SUPPORT.**
Please reference product serial number and
model number when contacting Humminbird.

Returning Your Unit for Service

Before sending your unit in for repair, please contact the factory, either by phone or by email, to obtain a Repair Authorization Number for your unit.

NOTE: *Please do not return your Humminbird to the store for service.*

Please have your product model name and serial number available before calling the factory. If you contact the factory by e-mail, please include your product model name and serial number in the e-mail, and use Request for Repair Authorization Number for your e-mail subject header. You should include your Repair Authorization Number in all subsequent communications about your unit.

For IN-WARRANTY service, complete the following steps:

- Obtain a Repair Authorization Number from Humminbird Customer Service.
- Tag product with your name, street address, phone number and your assigned Repair Authorization Number.
- Include a brief written description of the problem.
- Include a copy of your receipt (to show proof and date of purchase).
- Return product freight prepaid to Humminbird, using an insured carrier with delivery confirmation.

For OUT-OF-WARRANTY service, complete the following steps:

- Obtain a Repair Authorization Number from Humminbird Customer Service.
- Include payment in the form of credit card number and expiration date, or a money order. Please do not send cash.
- Tag product with your name, street address, phone number and your assigned Repair Authorization Number.
- Include a brief written description of the problem.
- Return product freight prepaid to Humminbird, using an insured carrier with delivery confirmation.

Contact Humminbird

Contact Humminbird Customer Service in any of the following ways:

Telephone
(Monday - Friday 8:00 a.m. to 4:30 p.m. Central Standard Time):

1-800-633-1468

E-mail
(typically we respond to your e-mail within three business days):

service@humminbird.com

Direct Shipping
Humminbird
Service Department
678 Humminbird Lane
Eufaula, AL 36027 USA

WARNING! *This device should not be used as a navigational aid to prevent collision, grounding, boat damage, or personal injury. When the boat is moving, water depth may change too quickly to allow time for you to react. Always operate the boat at very slow speeds if you suspect shallow water or submerged objects.*

WARNING! *Disassembly and repair of this electronic unit should only be performed by authorized service personnel. Any modification of the serial number or attempt to repair the original equipment or accessories by unauthorized individuals will void the warranty.*

WARNING! *This product contains chemicals known to the State of California to cause cancer and/or reproductive harm.*

ENVIRONMENTAL COMPLIANCE STATEMENT: *It is the intention of Johnson Outdoors Marine Electronics, Inc. to be a responsible corporate citizen, operating in compliance with known and applicable environmental regulations, and a good neighbor in the communities where we make or sell our products.*

WEEE Directive: *EU Directive 2002/96/EC "Waste of Electrical and Electronic Equipment Directive (WEEE)" impacts most distributors, sellers, and manufacturers of consumer electronics in the European Union. The WEEE Directive requires the producer of consumer electronics to take responsibility for the management of waste from their products to achieve environmentally responsible disposal during the product life cycle.*

WEEE compliance may not be required in your location for electrical & electronic equipment (EEE), nor may it be required for EEE designed and intended as fixed or temporary installation in transportation vehicles such as automobiles, aircraft, and boats. In some European Union member states, these vehicles are considered outside of the scope of the Directive, and EEE for those applications can be considered excluded from the WEEE Directive requirement.

This symbol (WEEE wheelie bin) on product indicates the product must not be disposed of with other household refuse. It must be disposed of and collected for recycling and recovery of waste EEE. Johnson Outdoors Marine Electronics, Inc. will mark all EEE products in accordance with the WEEE Directive. It is our goal to comply in the collection, treatment, recovery, and environmentally sound disposal of those products; however, these requirements do vary within European Union member states. For more information about where you should dispose of your waste equipment for recycling and recovery and/or your European Union member state requirements, please contact your dealer or distributor from which your product was purchased.

© 2013 Johnson Outdoors Marine Electronics, Inc. All rights reserved.